ECO NO.	DATE	REV.	REVISION RECORD	AUTH.	DR.BY

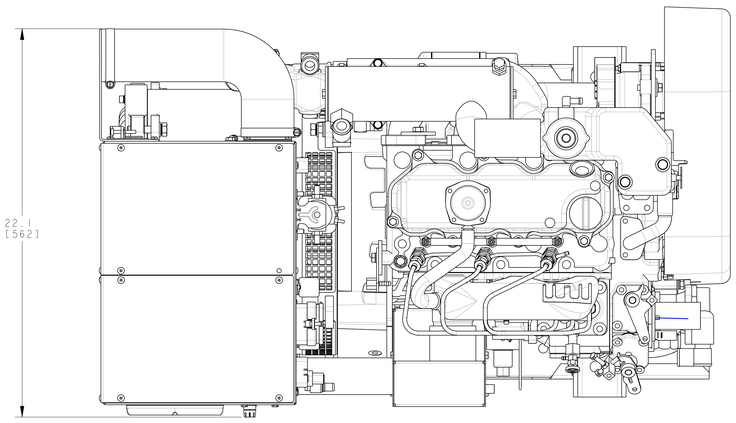

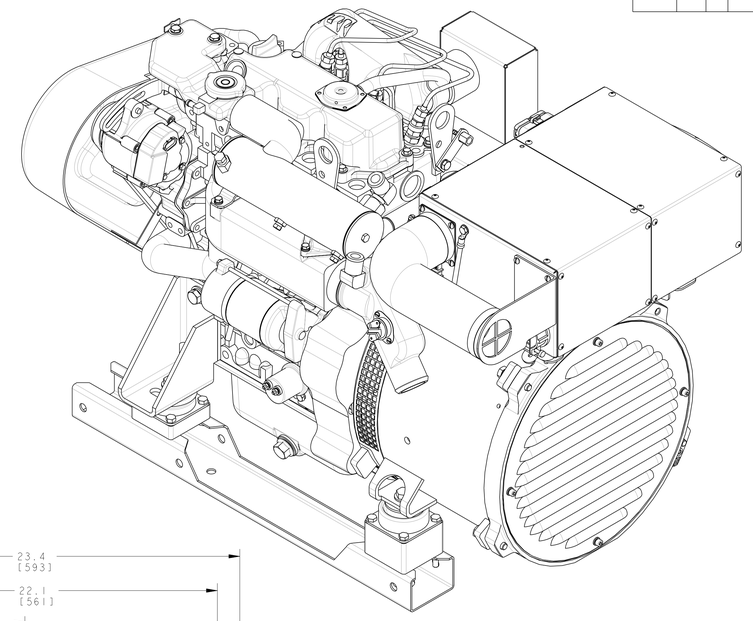

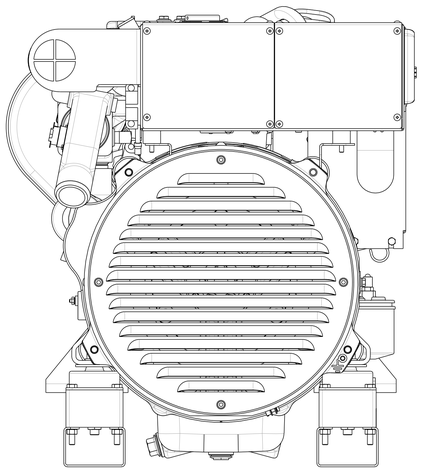

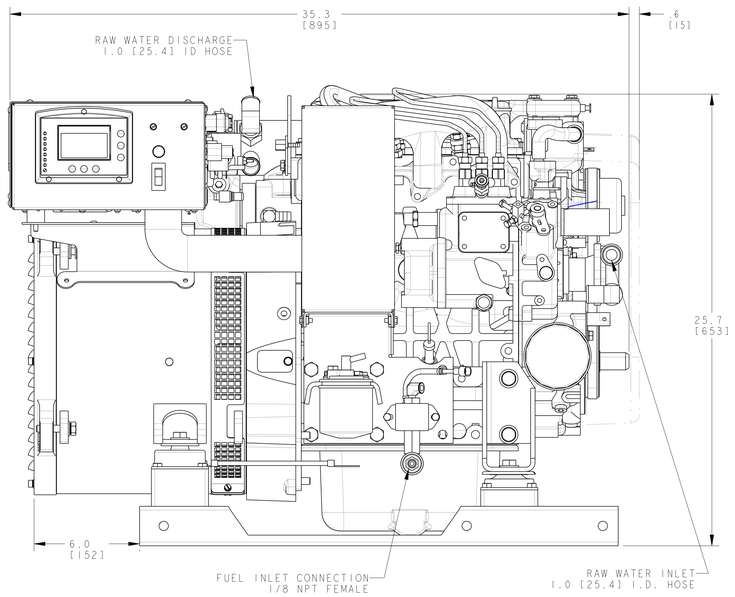

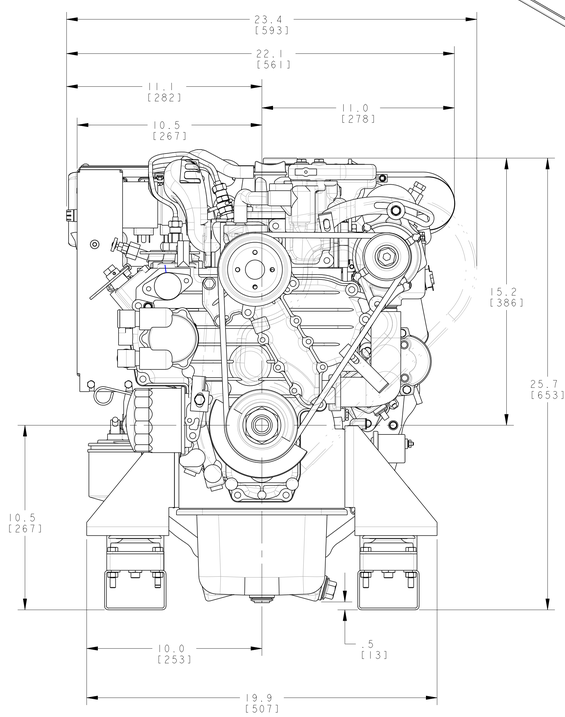

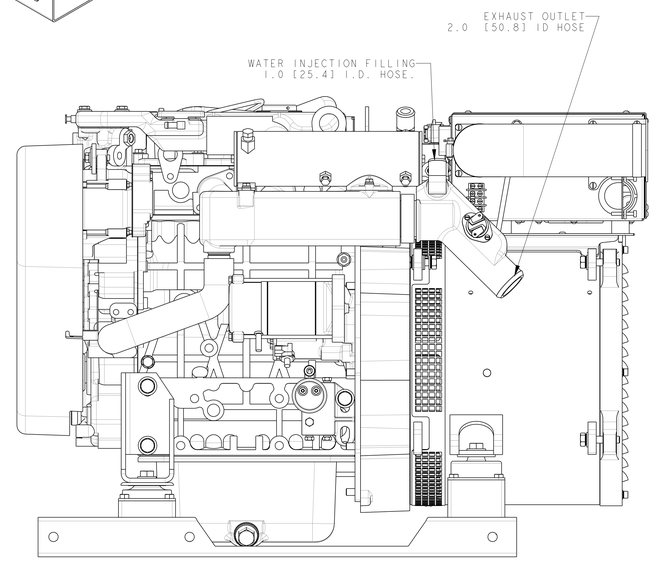

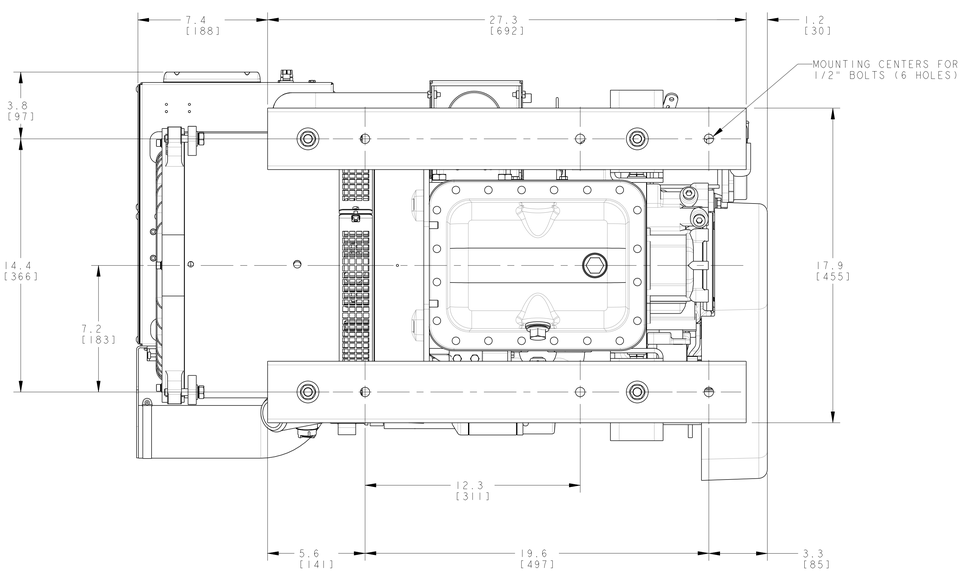

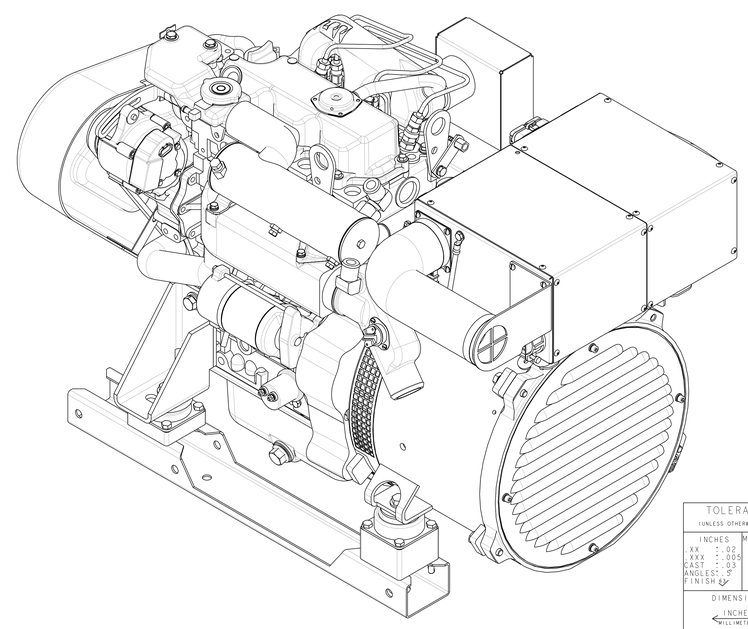

TOLERANCES (UNLESS OTHERWISE NOTED)	WESTERBEKE CORPORATION TAUNTON, MA. 02780		
INCHES .XX ±.02 .XXX ±.005 CAST ±.03 ANGLES: ±° FINISH 63 / MILLIMETERS X. ± 1.0 .X ± .5 .XX ± .13	TITLE DGINSTALL GEN 17.0 EDE @ 60Hz 13.5 EDE @ 50Hz		
	DRAWN BY GA	DATE 21/Feb/08	MATERIAL: --- --- ---
DIMENSIONS INCHES / MILLIMETERS (WHEN APPLICABLE)	APPROVED BY	DATE	
	SCALE 0.300	SIZE E	DRAWING NUMBER 54380	REV. –
	SHT. 1 of 2		